Technical Data Sheet

TP600

Illbruck TP600 NG Compriband Impregnated Sealing Tape

Impregnated foam tape *09-01-2026 / V 2*

Description

TP600 NG is a soft and flexible open cell polyurethane foam, impregnated with an acrylic based, UV stabilised resin. The resin is water repellent and contains a fire retardant. It is supplied as pre-compressed rolls with a self-adhesive side to aid initial location. Weather tight against the most severe combinations of wind and rain, it satisfies most expectations as an external weather seal for window perimeter seals and in building and civil engineering applications.

Features and Benefits

- 15 year performance guarantee
- Weather seal for wind-driven rain
- Breathable – for vapour diffusion
- Continually expands and contracts to accommodate movement whilst still sealing the joints
- Thermal and acoustic insulation
- Meets CWCT test for site water tightness (TN41).

Usage Purpose

TP600 is an impregnated joint sealing tape for use in a wide variety of movement joints including window perimeter seals and other applications.

Areas Of Application

TP600 NG is an impregnated joint sealing tape for use in a wide variety of movement joints including window perimeter seals and other applications.

Weathertight against the most severe combinations of wind and rain, it satisfies most requirements as an external weather seal in building and civil engineering applications.

With full BBA certification, the product has been extensively tested and has a proven reputation across both the UK and Europe. BBA Certificate N° 12/4891 Product Sheet 6 and 12/4891 Product Sheet 1 as part of the illbruck i3 system.

Available Colour

Anthracite is a stocked item, Grey is a made to order item

Shelf Life

2 years when stored in its original unopened containers.

Technical Data Sheet

TP600

Illbruck TP600 NG Compriband Impregnated Sealing Tape

Size Range

Tape reference	Suitable joint depth options (mm)	Suitable joint width for 600 Pa (Hurricane) (mm)	Suitable joint width for 450 Pa (Storm) (mm)	Roll length (m)
2	10,15,20	2	2	10,0
3	12,15,20	3	3	8,0
3 to 7	15,25	3 to 4	3 to 7	7,0
4 to 10	15,20	4 to 5	4 to 10	5,6
5 to 12	15,20	5 to 7	5 to 12	4,3
6 to 14	20,25	6 to 10	6 to 14	3,6
7 to 15	20,25	7 to 11	7 to 15	3,3
9 to 18	20	9 to 14	9 to 18	6,5
9 to 18	22,25,30	9 to 18	9 to 18	6,5
11 to 24	28,30	11 to 24	11 to 24	5,2
13 to 32	32,35,40	13 to 32	13 to 32	4,0
18 to 40	35,40	18 to 40	18 to 40	2,7
26 to 54	55	26 to 54	26 to 54	2,2
30 to 67	70	30 to 67	30 to 67	2,2

Technical Characteristics

Driving Rain Resistance	DIN 18545/EN 1027	Requirements are fulfilled up to 600 Pa where indicated in the table above.
Water Vapour Diffusion	EN 12572	< 0.5 m
Water Vapour Resistance	DIN 52615	μ < 100
Thermal Conductivity	DIN 52612	< 0.048 W/mK
Compatibility With Construction Materials	DIN 18542	No signs of corrosion observed on iron, zinc, steel, galvanised steel, aluminium, and copper. No adverse effects with concrete, aerated concrete, brick, some stones, PVC, Plexiglas or timber.
Service Temperature		-30°C to +90°C
Performance Guarantee		15 year warranty on performance. †
Storage		Store rolls horizontally and in original carton between +1°C and +20°C in dry conditions and away from direct sunlight. Re-seal packaging between use to prevent expansion during storage.

† Under the conditions specified by the manufacturers. Only valid on receipt of the correct registration documents in accordance with terms and conditions, available on request.

Necessary Tools

Tape measure, flat blade, cutting shears, metal skewer.

Application

After measuring the width of the joint and ensuring the total movement is within the capacity of the selected tape size, application may proceed. Remove outer release liner and the opening wedge at the start of the roll.

When applying TP600 NG around a window or door frame, the horizontal seals should be applied first, then the verticals - see Fig.1. For construction seals including a cross-joint, apply the vertical lengths first starting from the bottom to avoid stretching and make tight butt joints at tape connecting joints - see Fig 2, 3. Apply with the adhesive face against the 'best' substrate (for

windows, this will be the window rather than the joint substrate). When working in damp or cold conditions, if the tape is not adhering to the window or joint surface, a suitable wedge can be used to hold the tape in position until enough recovery has taken place to enable the tape to maintain its position. Remove wedge(s) at this time.

When calculating the length of tape to be fitted, add 20 mm/m to the actual joint length. Be sure to measure the opening and not the window. At the end of a roll, cut off the tape wedge finish. Repeat the process with a new roll, making a close compressed butt connection as shown in Fig. 2. Take care not to stretch the tape during application, accommodate the extra length by forming 'loops' per Fig. 1.

If the seal is to be tested using the CWCT (TN41) hose test, we recommend a minimum tape width of 25 mm (depth into joint). The tape should be allowed 7 - 10 days conditioning in the joint before testing. When installing TP600 NG between a window and a sloping sub-sill, the joint must be no more than 5° out of parallel. The TP600 NG should be applied to the 'level' face of the joint.

When inserting the tape into a joint with difficult access or when making butt or corner joints, the use of a skewer inserted into the tape thickness close to the end of the length to be applied allows the tape to be more accurately located, followed by consolidation with a flat blade.

When applying PU foam behind TP600 NG, prior to application, ensure that the tape has fully expanded to seal the joint otherwise foam is likely to penetrate past the edge of the tape and will be visible on the external face.

Please Note

TP600 NG is not suitable for locations where standing water or a head of water is likely to occur, e.g. under a window fixed on a flat topped sub-sill where the tape is not within 2-3 mm of the vertical face of the sub-sill.

High temperatures accelerate tape expansion, while low temperatures delay this. At ambient temperatures above 20°C, the tape should be stored in a cool place on the construction site away from direct sunlight. A small fridge is ideal for this.

Remaining rolls in opened boxes should be maintained in a horizontal state and weighed down to prevent lateral expansion (telescoping) of the rolls.

Whilst it is unnecessary to seal over the external face of the tape, the exposed edge can be plastered or painted over. The compatibility of sealants must be tested. The tape must not come into contact with chemicals containing solvents or aggressive chemicals.

During application, the tape must not be allowed to pre-expand wider than the joint width prior to application. Otherwise, structural stability of the tape may be impaired.

Guarantee / Warranty

Tremco CPG UK Ltd products are manufactured to rigid standards of quality. Any product which has been applied (a) in accordance with Tremco CPG UK Ltd written instructions and (b) in any application recommended by Tremco CPG UK Ltd, but which is proved to be defective, will be replaced free of charge. No liability can be accepted for the information provided in this leaflet although it is published in good faith and believed to be correct.

Technical Data Sheet

TP600

Illbruck TP600 NG Compriband Impregnated Sealing Tape

Tremco CPG UK Limited reserves the right to alter product specifications without prior notice, in line with Company policy of continuous development and improvement.

Health And Safety Precautions

Safety data sheet must be read and understood before use.

Technical Service

Tremco CPG UK Limited has a team of experienced Technical Sales Representatives who provide assistance in the selection and specification of products. For more detailed information, service and advice, please call Customer Services on 01942 251400.

Certification

Application Images

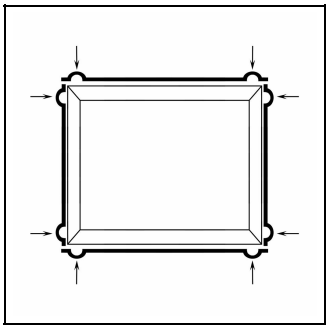

1.Tape application at corners. Note oversize length 20 mm/m. Install small loop to ensure sufficient length

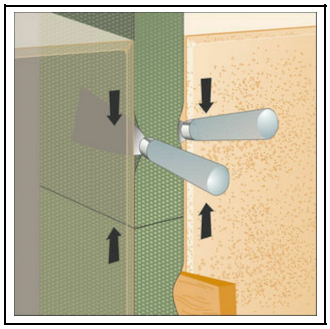

2.Compression of tape to make weathertight butt joints.

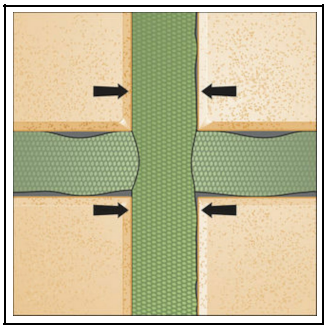

3.Compression of tape to make weathertight cross joints.

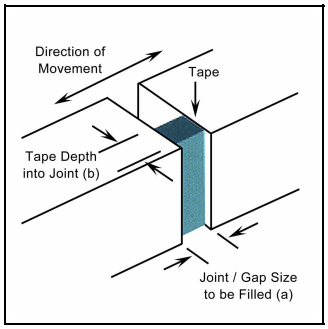

4.Tape Selection (a) = tape thickness; (b) = tape width Eg 22/9-18 where (a) = 9 to 18 mm and (b) = 22 mm

Tremco CPG UK Limited
Coupland Road, Hindley Green
Wigan, WN2 4HT
United Kingdom
+44 (0)1942 251400
hello@tremcocpg.com